ITEM #

MODEL #

NAME #

SIS #

AIA #

Turbo Liquidizers
TBXPro motor, variable speed



602171 (DTBXPROVT) TBX Pro Turboliquidizer motor only (without tools), variable speed, 630-1700 rpm, 3ph, 380-480V/50-60Hz

Short Form Specification

Item No.

Includes only the motor base. To have a functioning appliance, tube(s) and tool(s) must be ordered separately (see optional accessories). Constructed entirely in stainless steel and mounted on a trolley with 4 wheels with brakes. Fast and simple height adjustment (250mm range). Can be adapted to all types of pots and braising pans. Safety device allows the machine to start only when in working position. Variable speed: 20-steps from 630 to 1700 rpm. The touch button control panel has IP65 protection with low voltage level.

APPROVAL:

Main Features

- Used to mix, blend and emulsify vegetable and soups, fruit and vegetable purées, liquid pastries, sauces and much more directly in cooking pots/containers.
- Equipped with crank handle for fast and easy height adjustment.
- Mixer tube is easily removable without tools and can be dismantled in separate parts: tube, shaft, bearing and rotor.
- All components of tube and head are in stainless steel and dishwasher safe (excluding bearings).
- Safety device allows the machine to start only when it is in a working position.
- Turbine accelerates the flow of the liquid over the impeller providing a greater throughput and finer grinding.
- Includes only the motor base. To have a functioning appliance, tube(s) and tool(s) must be ordered separately (see optional accessories).
- Suggested for pans containing up to 700 liters of liquid or up to 200 kg of potatoes.
- For mash prepared with potatoes, using specific puree tool (see optional accessories).
- Adapt to all types of cooking containers and rim heights, with 3 tube lengths (348 mm for braising pans, 448 mm or 568 mm) and 4 tools for soup/puree (deep pots/ braising pans).
- Wide speed adjustment range (20 steps) allows to adapt to any processing type, starting slow and increasing speed gradually.

Construction

- Constructed entirely in stainless steel to offer maximum durability.
- Mounted on a mobile stainless steel trolley (4 wheels with brakes). Storage position: fold down motor/arm to save space.
- Trolley with support to store up to two tubes (with assembled tool).
- IP65 waterproof control panel, IP23 throughout the entire machine.
- 250mm height adjustment range for the motor body. Different tube lengths allow to adapt to pot depths (see optional accessories).
- All parts in contact with food are conform to 1935/2004/EC.
- Variable speed: 20-steps from 630 to 1700 rpm.
- Power: 1500 watts.
- CE approved (Machine Directive) with EN

test report from third party notified body.

- 380-440V/60Hz/3-phase available on request.
- 2 speeds: 850 and 1700 rpm.
- 60Hz available on request (S-code).
- Power: 2200 watts.
- CE approved (Machine Directive) with CB test report from third party notified body.
- Equipped with 8 m power cord without plug.

The company reserves the right to make modifications to the products without prior notice. All information correct at time of printing.

2026.11.19

Optional Accessories

- TBX Pro soup grid, hole diam. 8-10 mm — PNC 650168 ❑
- TBX Pro soup head (without tube) — PNC 650172 ❑
- TBX Pro puree head for Braising Pan (without tube) — PNC 650173 ❑
- TBX Pro medium tube 448 mm — PNC 650175 ❑
- TBX Pro long tube 568 mm — PNC 650176 ❑
- TBX Pro puree head (without tube) — PNC 650177 ❑
- TBX Pro soup grid, hole diam. 19 mm — PNC 653507 ❑
- TBX Pro soup head for Braising Pan (without tube) — PNC 653521 ❑
- TBX Pro short tube with deflector, 348 mm (recommended for Braising Pans) — PNC 653821 ❑

The company reserves the right to make modifications to the products without prior notice. All information correct at time of printing.

2026.11.19

Turbo Liquidizers
TBXPro motor, variable speed

Top

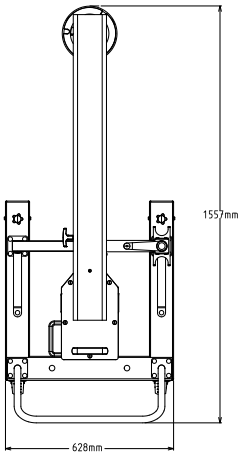

Side

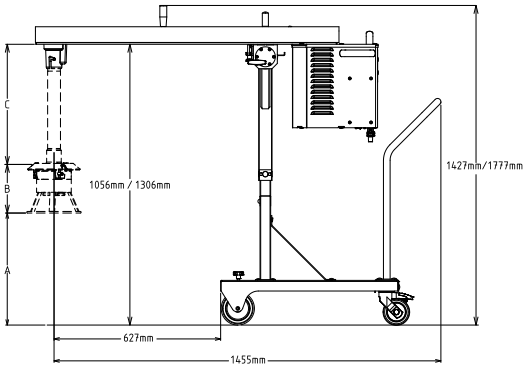

EI = Electrical inlet (power)

Other

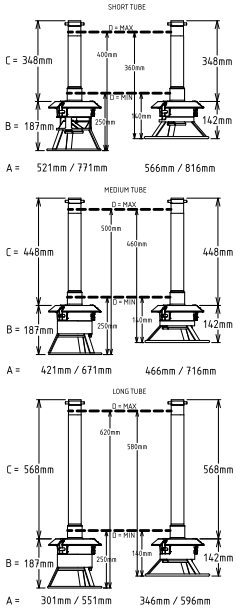

Electric

Supply voltage:	380-480 V/3 ph/50-60 Hz
Electrical power, max:	1.5 kW
Total Watts:	1.5 kW
Plug type:	Cable without plug

Key Information:

External dimensions, Width:	628 mm
External dimensions, Depth:	1556 mm
External dimensions, Height:	1122 mm
Net weight:	80 kg
Shipping weight:	94 kg
Height adjustment:	1122/1372 mm
Approvals	UKCA;CE
Waterproof index:	IP23
Number of speeds:	ISO 9001; ISO 14001
Rotation speed:	

The company reserves the right to make modifications to the products without prior notice. All information correct at time of printing.

2026.11.19